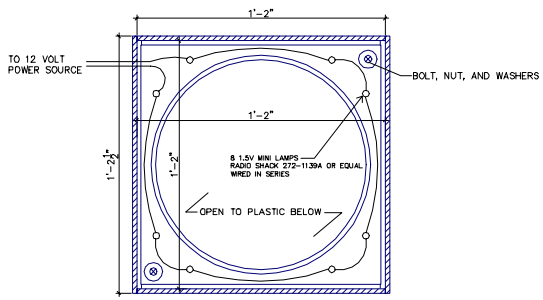

PLAN VIEW

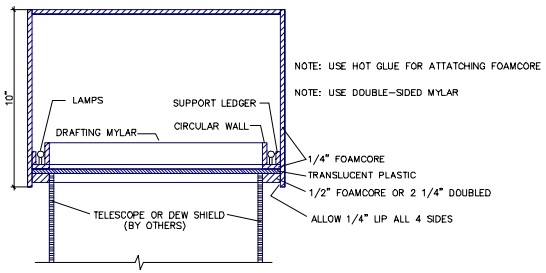

SECTION – TELESCOPE

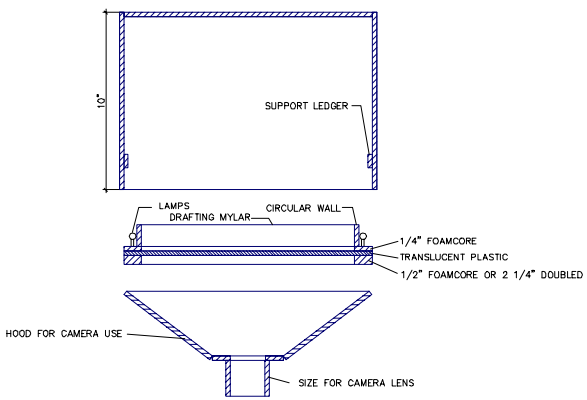

EXPLODED SECTION – CAMERA

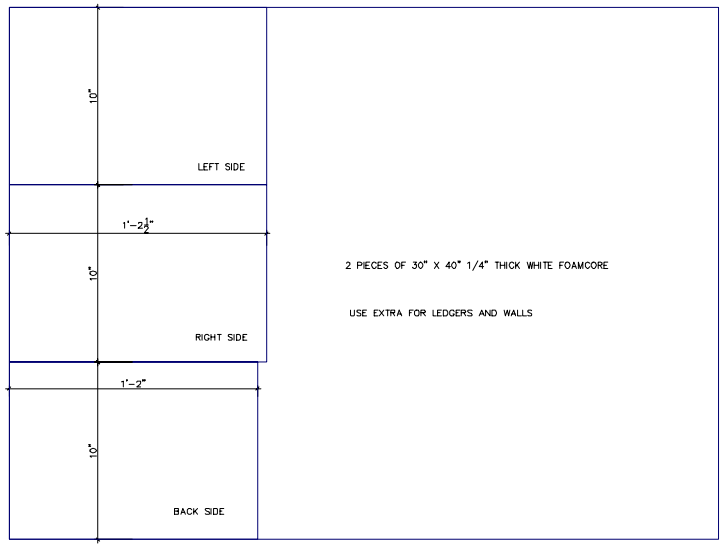

NOTE: ALL SIZES FOR MEADE 10" LX-200 WITH DEW SHIELD

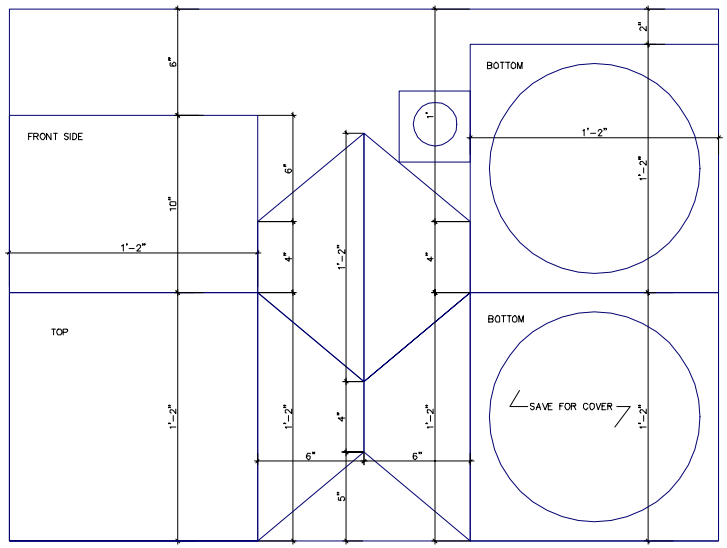

NOTE: ALL SIZES FOR MEADE 10" LX-200 WITH DEW SHIELD

PROJECT

ASTRONOMICAL
CCD LIGHTBOX

ASTRONOMICAL WEBSITE
www.pyros.com/greg

EMAIL
gpyros@home.com

REVISIONS

2/19/2001

CONSULTANTS

LICENSED ARCHITECT
GREGORY G. PYROS
#C13646
RENEWAL DATE
JAN 2001
STATE OF CALIFORNIA

JOB

12/19/2000	DATE
N.T.S.	SCALE
A-1	SHEET

3197 Airport Loop Drive ■ Building A ■ Costa Mesa ■ California 92626 ■ 714 708-3400

PYROS PICTURES

COPYRIGHT 2001, PYROS PICTURES